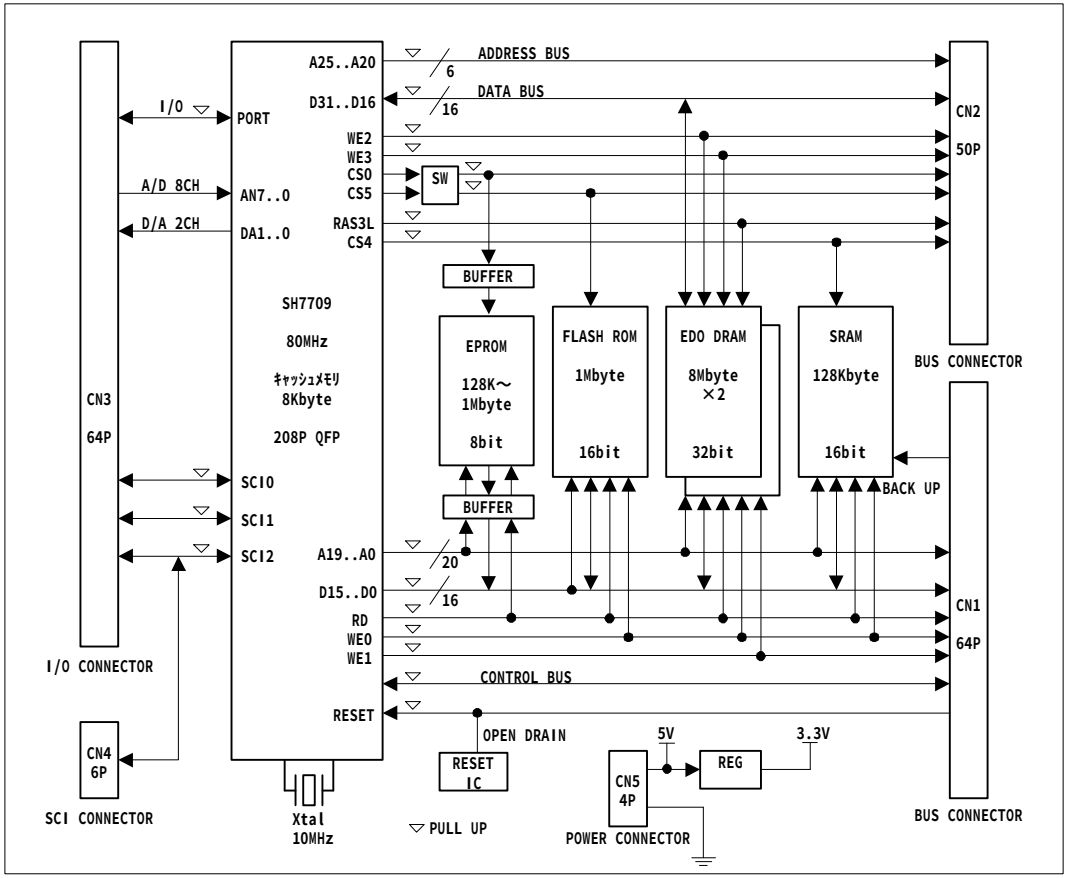
A25..A20
6
ADDRESS BUS
D31..D16
16
DATA BUS
I/O
PORT
WE2
WE3
CS0
CS5
SW
A/D 8CH
AN7..0
D/A 2CH
DA1..0
RAS3L
CS4
CN2
50P
BUFFER
SH7709
80MHz
ｷｬｯｼｭﾒﾓﾘ
8Kbyte
208P QFP
EPROM
128K～
1Mbyte
8bit
FLASH ROM
1Mbyte
16bit
EDO DRAM
8Mbyte
×2
32bit
SRAM
128Kbyte
16bit
BUS CONNECTOR
CN3
64P
SCI0
SCI1
SCI2
BUFFER
BACK UP
A19..A0
20
D15..D0
16
RD
WE0
WE1
CN1
64P
I/O CONNECTOR
CONTROL BUS
RESET
OPEN DRAIN
5V
3.3V
CN4
6P
RESET
IC
REG
CN5
4P
SCI CONNECTOR
Xtal
10MHz
PULL UP
POWER CONNECTOR
BUS CONNECTOR