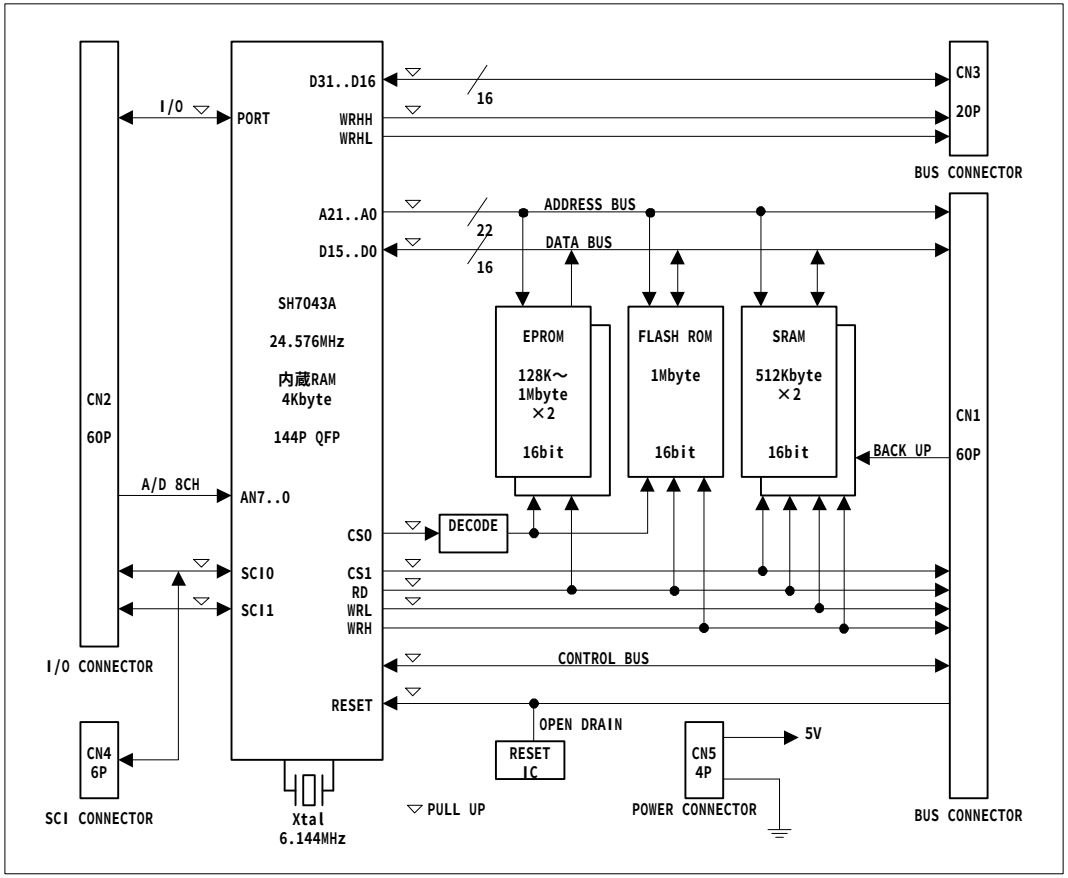
CN2
60P
I/O CONNECTOR
I/O
PORT
A/D 8CH
AN7..0
SCI0
SCI1
CN4
6P
SCI CONNECTOR
D31..D16
16
WRHH
WRHL
A21..A0
22
D15..D0
16
SH7043A
24.576MHz
内蔵RAM
4Kbyte
144P QFP
CS0
CS1
RD
WRL
WRH
RESET
Xtal
6.144MHz
ADDRESS BUS
DATA BUS
EPROM
128K～
1Mbyte
×2
16bit
FLASH ROM
1Mbyte
16bit
SRAM
512Kbyte
×2
16bit
DECODE
CONTROL BUS
OPEN DRAIN
RESET
IC
PULL UP
CN5
4P
POWER CONNECTOR
5V
CN3
20P
BUS CONNECTOR
CN1
60P
BACK UP
BUS CONNECTOR